3/4" SQ.DR. IMPACT WRENCH

EXPLODED VIEW

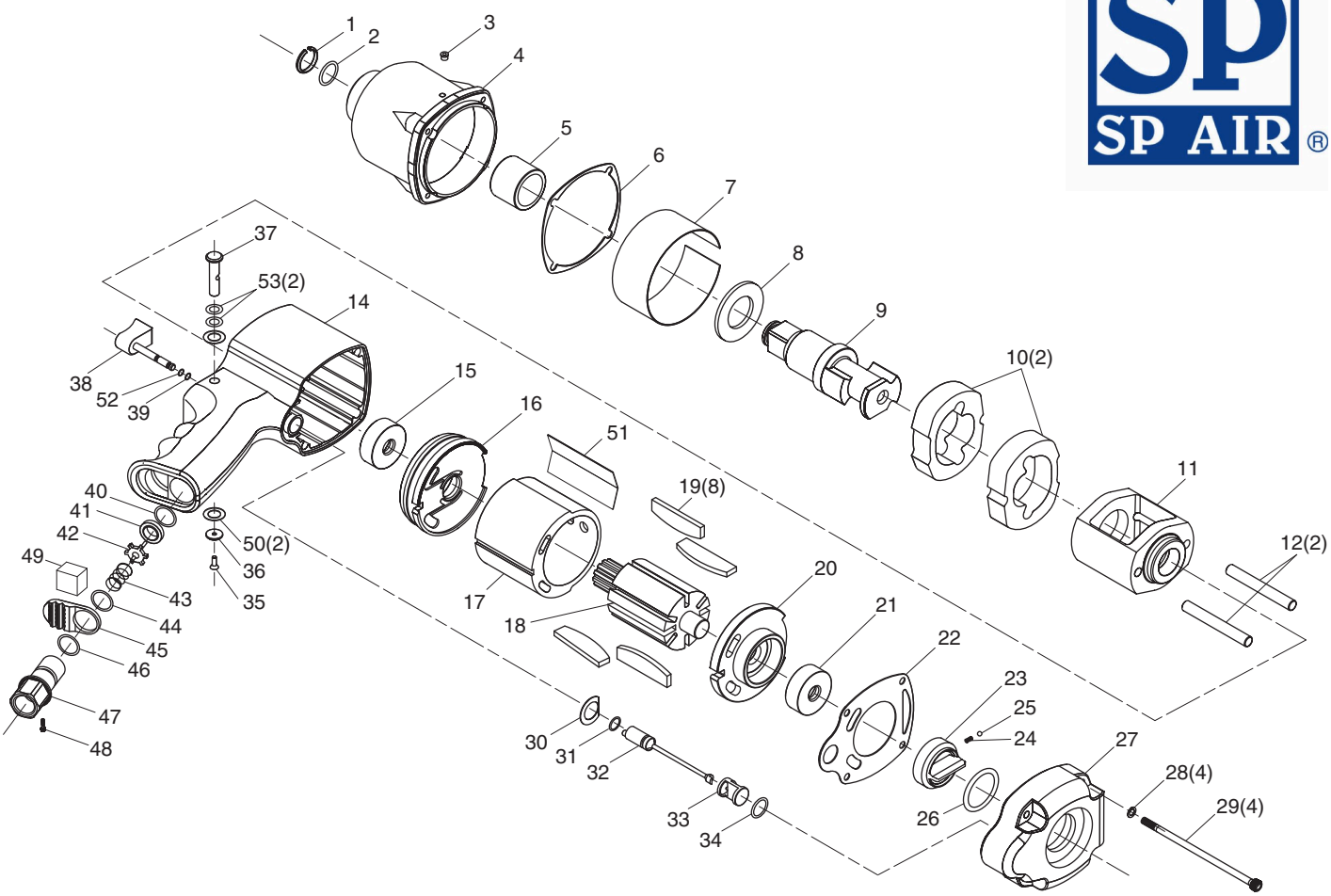

PARTS LIST

Index No.	Parts No.	Description	Qty. Per tool
1	7150V8-01	Retainer Ring	1
2	7150V8-02	O-Ring	1
3	7150V8-03	Grease Fitting	1
4	7150V8-04	Hammer Case	1
5	7150V8-05	Hammer Case Bushing	1
6	7150V8-06	Hammer Case Gasket	1
7	7150V8-07	Sleeve	1
8	7150V8-08	Spacer	1
9	7150V8-09	3/4" Anvil Shank	1
10	7150V8-10	Hammer	2
11	7150V8-11	Hammer Frame	1
12	7150V8-12	Hammer Pin	2
14	7150V8-14	Motor Housing	1
15	7150V8-15	Ball Bearing	1
16	7150V8-16	Front End Plate	1
17	7150V8-17	Cylinder	1
18	7150V8-18	Rotor	1
19	7150V8-19	Rotor Blade	8
20	7150V8-20	Rear End Plate	1
21	7150V8-21	Ball Bearing	1
22	7150V8-22	Housing Cap Gasket	1
23	7150V8-23	Regulator Dial	1
24	7150V8-24	Spring	1
25	7150V8-25	Steel Ball	1
26	7150V8-26	O-Ring	1
27	7150V8-27	Housing Cap	1
28	7150V8-28	Spring Washer	4
29	7150V8-29	Screw	4
30	7150V8-30	Spacer	1

Index No.	Parts No.	Description	Qty. Per tool
31	7150V8-31	O-Ring	1
32	7150V8-32	Reverse Shaft	1
33	7150V8-33	Reverse Valve	1
34	7150V8-34	O-Ring	1
35	7150V8-35	Screw	1
36	7150V8-36	Washer	1
37	7150V8-37	Reverse Button	1
38	7150V8-38	Trigger	1
39	7150V8-39	O-Ring	1
40	7150V8-40	O-Ring	1
41	7150V8-41	Valve Seat	1
42	7150V8-42	Valve	1
43	7150V8-43	Valve Spring	1
44	7150V8-44	O-Ring	1
45	7150V8-45	Deflector	1
46	7150V8-46	O-Ring	1
47	7150V8-47	Inlet Bushing	1
48	7150V8-48	Screw	1
49	7150V8-49	Muffler Foam	1
50	7150V8-50	Cushion Ring	2
51	7150V8-51	Plate	1
52	7150V8-52	O-Ring	1
53	7150V8-53	O-Ring	2

Learn more about air impact wrenches on our website.