5" HIGH SPEED AIR SANDER

EXPLODED VIEW

SP-1350

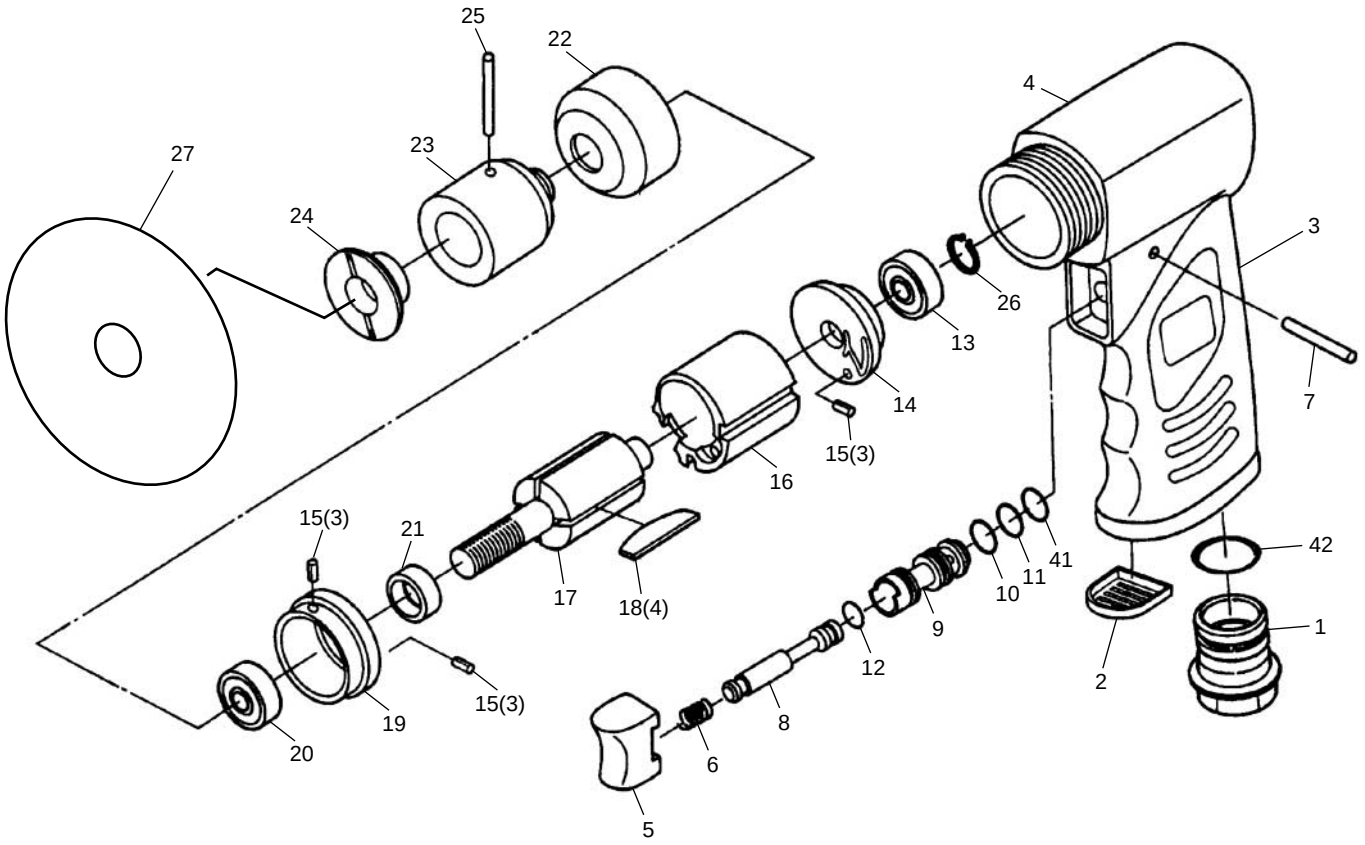

PARTS LIST

Index No.	Parts No.	Description	Qty. Per tool
1	350-01	Inlet Bushing	1
2	350-02	Deflector	1
3	350-03	Handle Cover	1
4	350-04	Motor Housing	1
5	350-05	Trigger	1
6	350-06	Valve Spring	1
7	350-07	Spring Pin	1
8	350-08	Valve Shaft	1
9	350-09	Valve Bushing	1
10	350-10	O-Ring	1
11	350-11	O-Ring	1
12	350-12	Throttle Valve O-Ring	1
13	350-13	Ball Bearing	1
14	350-14	Rear End Plate	1
15	350-15	Spring Pin	3
16	350-16	Cylinder	1
17	350-17	Rotor	1
18	350-18	Rotor Blade	4
19	350-19	Front End Plate	1
20	350-20	Ball Bearing	1
21	350-21	Rotor Collar	1
22	350-22	Lock Ring	1
23	350-23	Disc Holder	1
24	350-24	Disc Nut	1
25	350-25	Rod	1
27	350-27	5" Plate	1
28	350-28	Retaining Ring	1
41	350-41	O-Ring	1
42	350-42	O-Ring	1

Index No.	Parts No.	Description	Qty. Per tool

Looking for dependable power tools? Rely on SP for quality and long-lasting products.