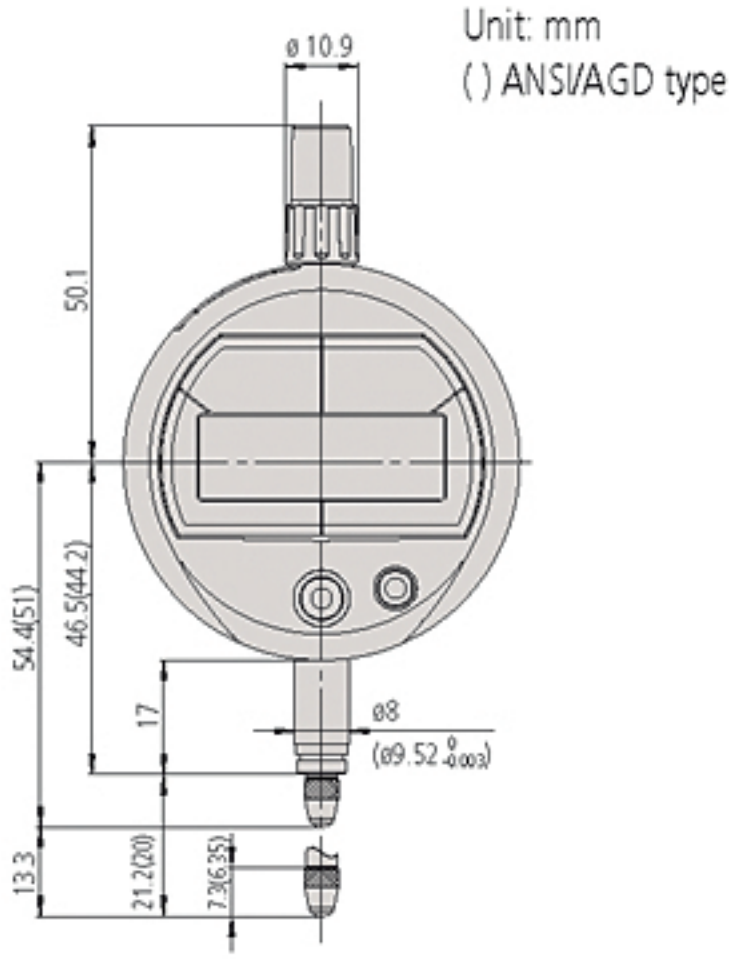

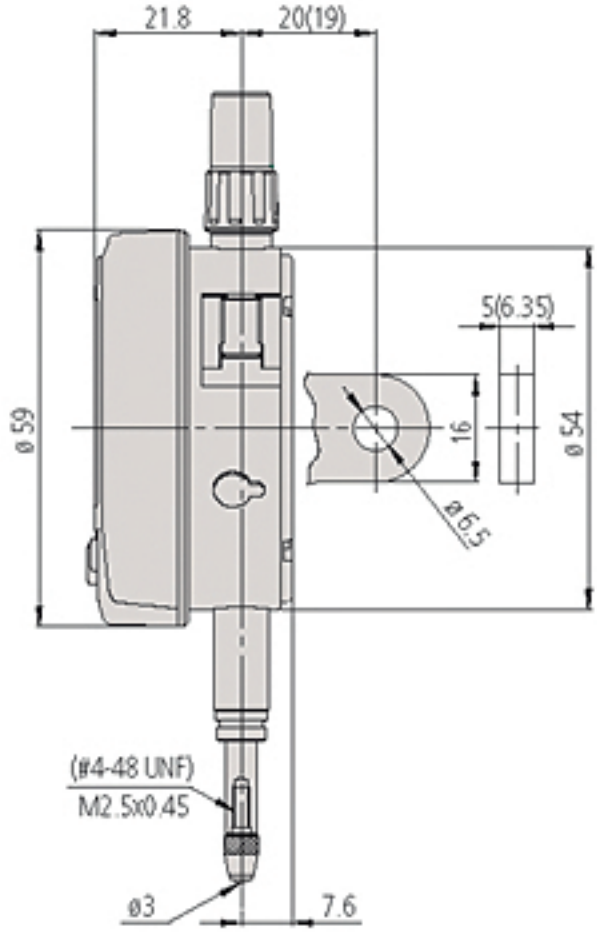

Rely on premium measuring tools by Mitutoyo if you're looking for quality and efficiency.