Unit: mm

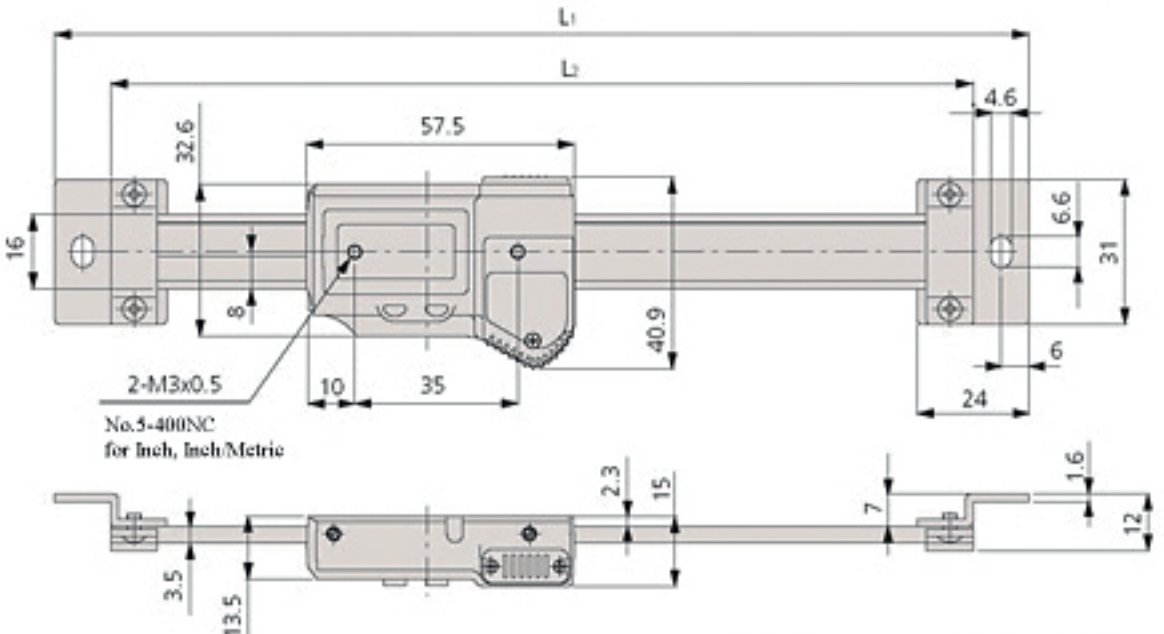

Range	L1	L2	Mass
100mm / 4"	209	185	390
150mm / 6"	259	235	410
200mm / 8"	311	287	430

Rely on premium measuring tools by Mitutoyo if you're looking for quality and efficiency.