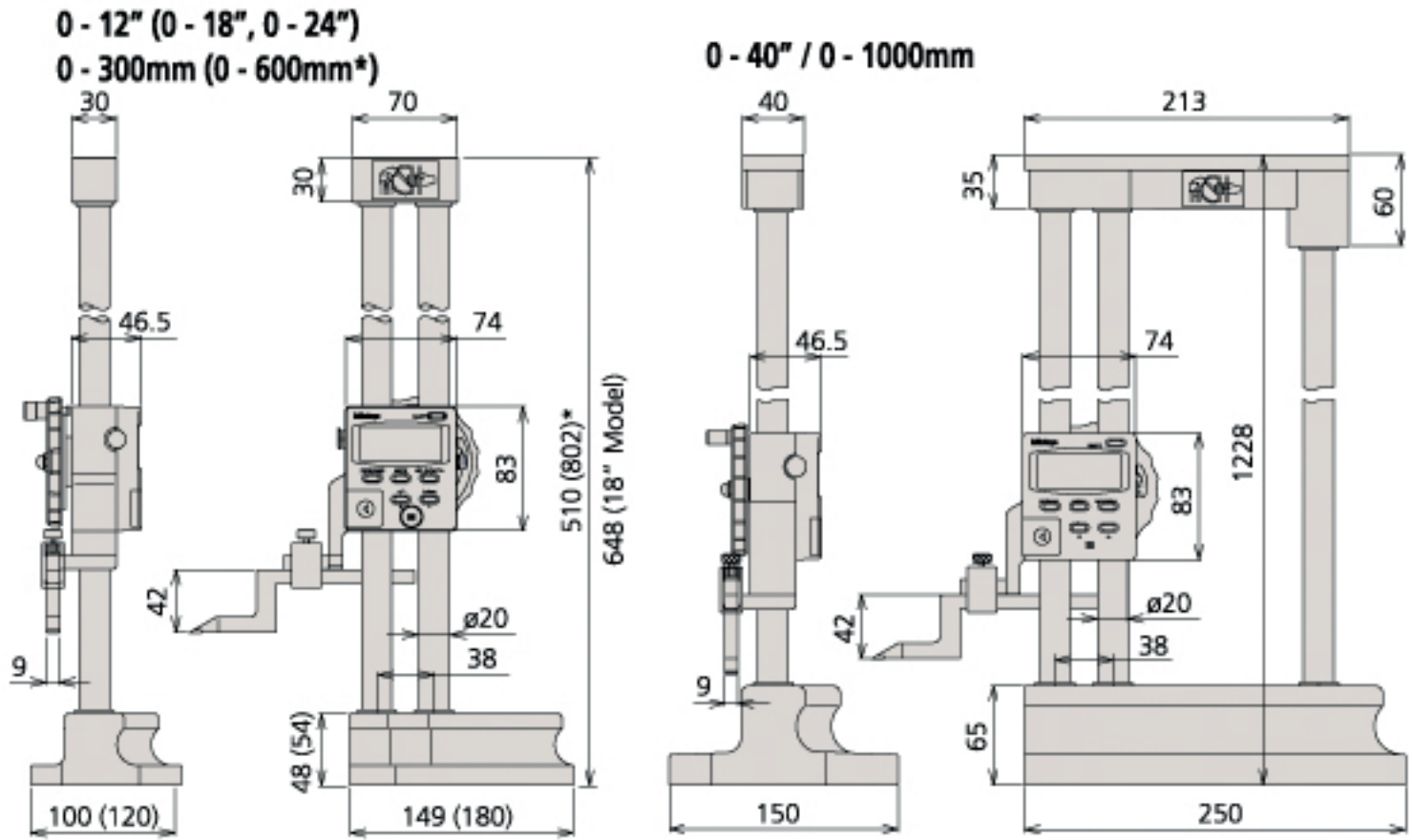

Looking for dependable measuring tools? Rely on Mitutoyo for quality and long-lasting products.