3/8" (10mm) DRILL

Model 6407
Model 6408

IMPORTANT - To assure product SAFETY and RELIABILITY, repairs, maintenance or adjustments should be performed by **MAKITA** Service Centers or other qualified service organizations. Always use **MAKITA** replacement parts.

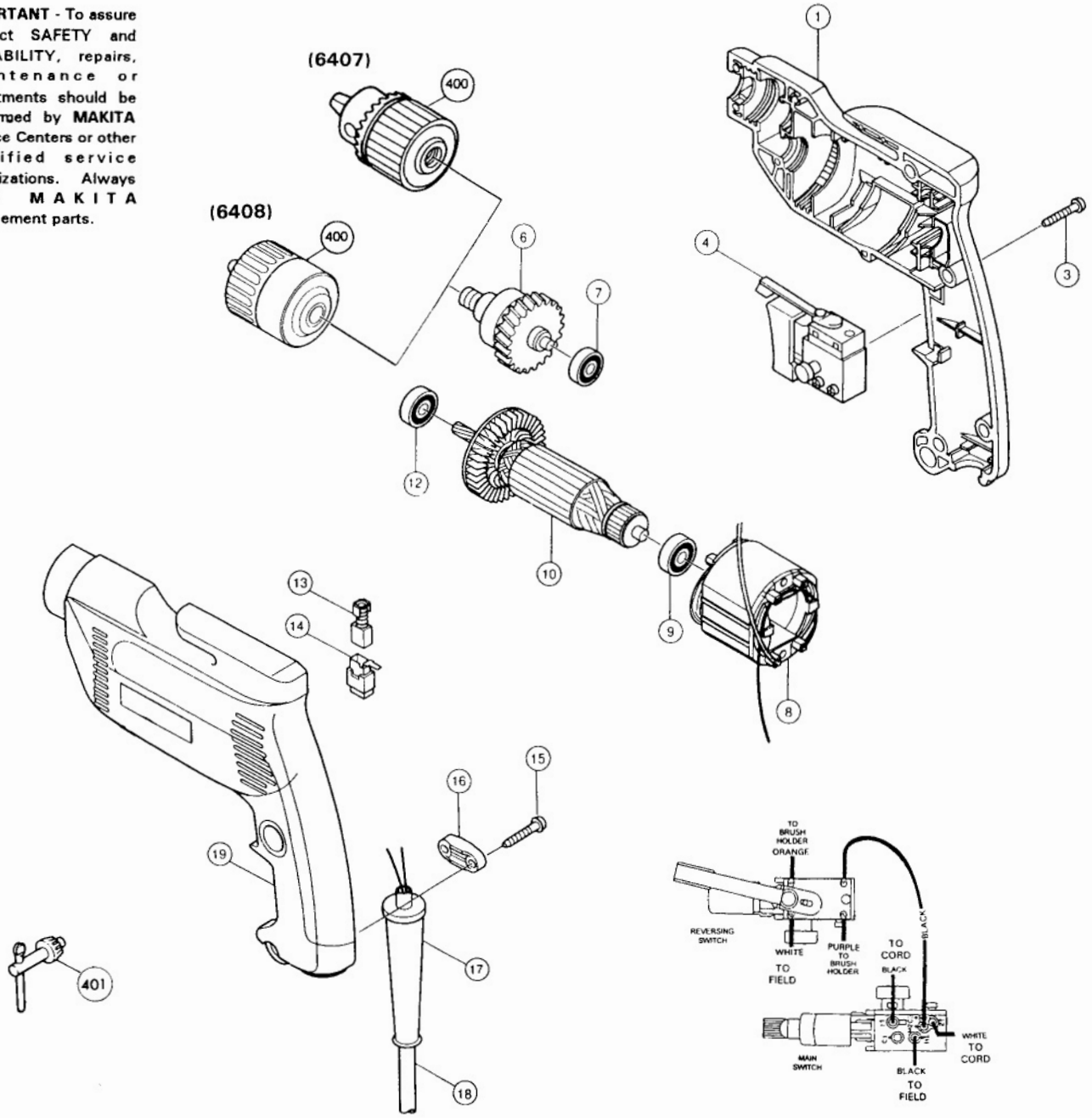

Fig.	Part No.	Qty. Used	Description
1	182862-9	1	HOUSING SET (Incl. Fig. 19)
3	265995-6	8	TAPPING SCREW 4x18
4	651935-4	1	SWITCH
6	153246-8	1	GEAR CPL.
7	211020-1	1	BALL BEARING 626Z
8	633336-8	1	FIELD
9	211030-8	1	BALL BEARING 627Z
10	517196-5	1	ARMATURE ASS'Y (Incl. Fig. 9 & 12)
12	211030-8	1	BALL BEARING 627Z
13	191927-6	1	CARBON BRUSH SET, CB-407
14	643923-5	2	BRUSH HOLDER
15	265995-6	2	TAPPING SCREW 4x18
16	687063-9	1	STRAIN RELIEF
17	682549-8	1	CORD GUARD (6407)
	682502-4	1	CORD GUARD (6408)
18	664013-1	1	CORD (2x18x8 SJT)
19	182862-9	1	HOUSING SET (Incl. Fig. 1)

ACCESSORIES

Fig.	Part No.	Qty. Used	Description
400	763085-4	1	DRILL CHUCK S10 WITH KEY, 763423-0 (6407)
	763109-6	1	KEYLESS CHUCK (6408)
401	763423-0	1	CHUCK KEY (6407)

05-96

Shop for quality Makita products on our website.

Learn more about drills and drivers we have.