7-1/4" (185mm) METAL CUTTER MODEL 4131

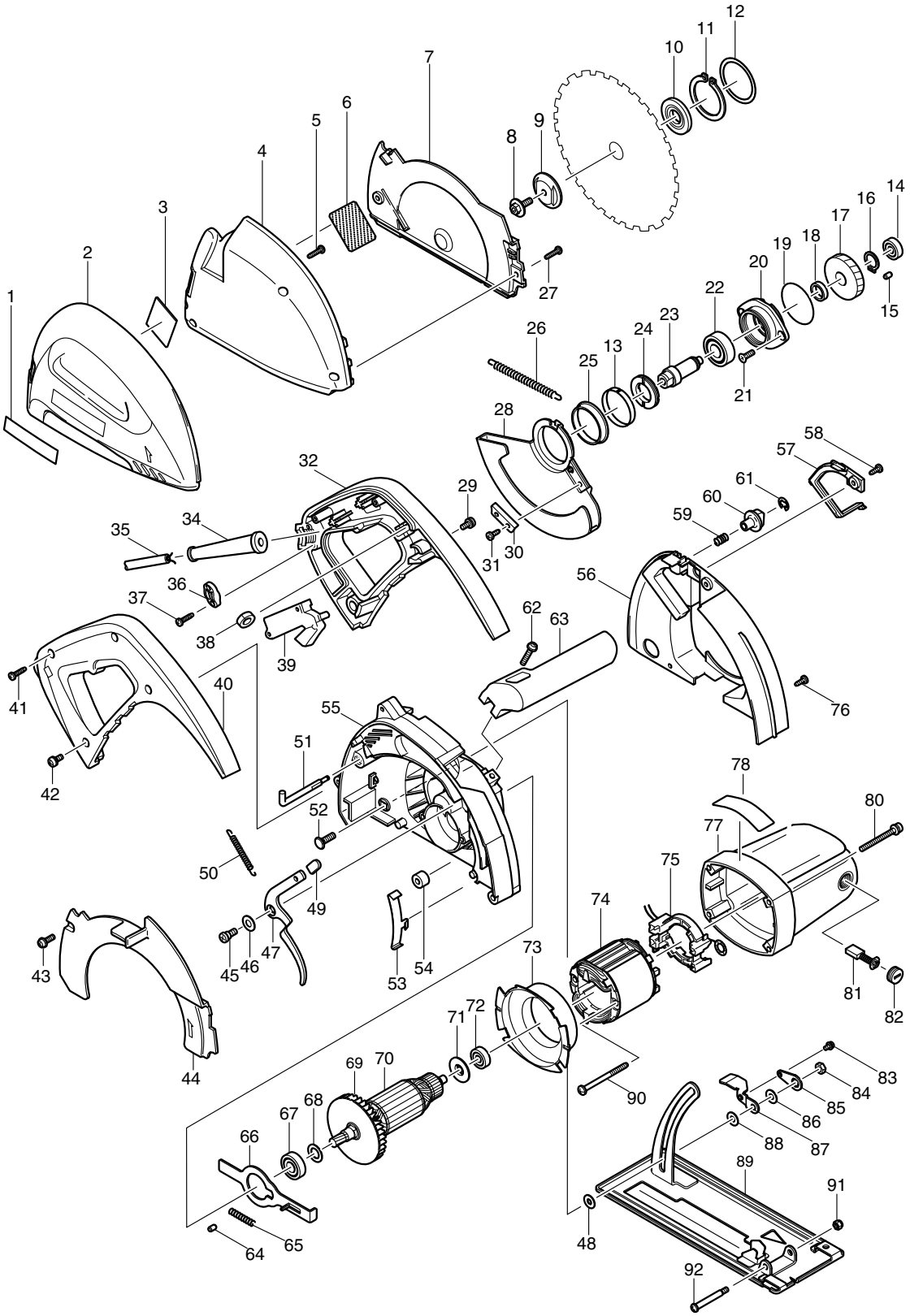

Item No.	Part No.	Qty. Used	Description
1	819064-1	1	MAKITA MARK
2	183836-3	1	DUST CASE COVER (Inc. 1 ea. Caution Label 810056-3, Incl. Fig. 1)
3	431005-3	1	HEAT RESISTING GLASS
4	317776-5	1	DUST CASE
5	265995-6	2	TAPPING SCREW 4X18
6	343760-4	1	PUNCHING METAL COVER
7	317777-3	1	DUST PLATE
8	266226-6	1	HEX. SOCKET HEAD BOLT M6X18
9	224366-6	1	OUTER FLANGE 40
10	224151-7	1	INNER FLANGE 40
11	961201-4	1	RETAINING RING S-42
12	267784-5	1	WASHER 42
13	343759-9	1	THICKNESS RING
14	211031-6	1	BALL BEARING 608LLB
15	263002-9	1	RUBBER PIN 4
16	961055-9	1	RETAINING RING S-15
17	226591-5	1	HELICAL GEAR 48
18	257053-2	1	RING 15
19	213621-1	1	O RING 46
20	316579-4	1	BEARING BOX
21	251372-8	2	COUNTERSUNK HEAD SCREW M5X12
22	211228-7	1	BALL BEARING 6202DDW
23	324475-2	1	SPINDLE
24	285807-7	1	BEARING RETAINER 22-36
25	345422-0	1	SPACER
26	231828-7	1	TENSION SPRING 4
27	265995-6	2	TAPPING SCREW 4X18
28	317775-7	1	SAFETY COVER
29	911213-7	2	PAN HEAD SCREW M5X12
30	344944-7	1	SUB PLATE
31	266026-4	1	TAPPING SCREW BIND CT 4X12
32	183826-6	1	HANDLE SET (Incl. Fig. 32)
34	682503-2	1	CORD GUARD 8-90
35	664250-7	1	POWER SUPPLY CORD #16-2-2.5
36	687063-9	1	STRAIN RELIEF
37	265995-6	2	TAPPING SCREW 4X18
38	421492-4	1	SPONGE RING
39	651057-0	1	SWITCH TG71CL-2
40	183826-6	1	HANDLE SET (Incl. Fig. 40)
41	265995-6	2	TAPPING SCREW 4X18
42	911213-7	2	PAN HEAD SCREW M5X12
43	911223-4	1	PAN HEAD SCREW M5X16
44	317778-1	1	BLADE COVER
45	251267-5	1	PAN HEAD SCREW M6
46	941201-0	1	FLAT WASHER 8
47	345421-2	1	OPEN LEVER
48	253783-3	1	FLAT WASHER 6
49	421676-4	1	RUBBER CAP
50	231823-7	1	TENSION SPRING 4
51	324476-0	1	HOOK
52	266031-1	1	CAP SQUARE NECK BOLT M6X20
53	343758-1	1	PROTECTOR
54	262511-5	1	RUBBER SLEEVE 6
55	153924-0	1	GEAR HOUSING CAL. (Incl. Fig. 15,64)
56	418612-9	1	GEAR HOUSING COVER
57	418613-7	1	LEAD COVER
58	266026-4	1	TAPPING SCREW BIND CT 4X12
59	231402-1	1	COMPRESSION SPRING 7
60	271421-5	1	THUMB PIPE 23
61	961017-7	1	STOP RING E-3
62	911243-8	2	PAN HEAD SCREW M5X25
63	415469-9	1	GRIP
64	263002-9	1	RUBBER PIN 4
65	233092-6	1	COMPRESSION SPRING 5
66	343832-5	1	SHAFT LOCK
67	211131-2	1	BALL BEARING 6001DDW
68	253744-3	1	FLAT WASHER 12
69	241876-8	1	FAN 76
70	513576-3	1	ARMATURE ASS'Y 115V (Inc. Fig. 67-69,71,72)
71	681634-4	1	INSULATION WASHER
72	211031-6	1	BALL BEARING 608LLB
73	415467-3	1	BAFFLE PLATE
74	634511-9	1	FIELD 115V
75	638358-3	1	SUPPORT COMPLETE
76	266026-4	3	TAPPING SCREW BIND CT 4X12
77	159685-0	1	MOTOR HOUSING CAL. (Inc. 2 ea. Brush Holder 643754-2)
78	816816-1	1	INDICATION LABEL
80	911263-2	4	PAN HEAD SCREW M5X40
81	191963-2	1	CARBON BRUSH CB-303
82	643750-0	2	BRUSH HOLDER CAP
83	911108-4	1	PAN HEAD SCREW M4X8
84	252135-5	1	HEX. NUT
85	341718-7	1	LOCK PLATE
86	253804-1	1	FLAT WASHER 6
87	342907-7	1	LEVER PLATE
88	253804-1	1	FLAT WASHER 6
89	165387-8	1	BASE
90	266029-8	2	TAPPING SCREW 5X65
91	252103-8	1	HEX. LOCK NUT M5-8
92	265075-8	1	PAN HEAD SCREW M5
D01	654020-2	2	RING TERMINAL
D02	654501-6	2	CONNECTOR P-1.25
A02	410047-0	1	WRENCH HOLDER 5.6

Accessories

A01	191686-2	1	SAFETY GOGGLE
A03	783203-8	1	HEX. WRENCH 5
A04	A-93815	1	CHIPPED SAW BLADE 185

Looking for power saws? Visit our website.