Engraring Pen
Item No : QA-511

● The consumable parts ▲ The replacement parts ★ The non-replacement parts

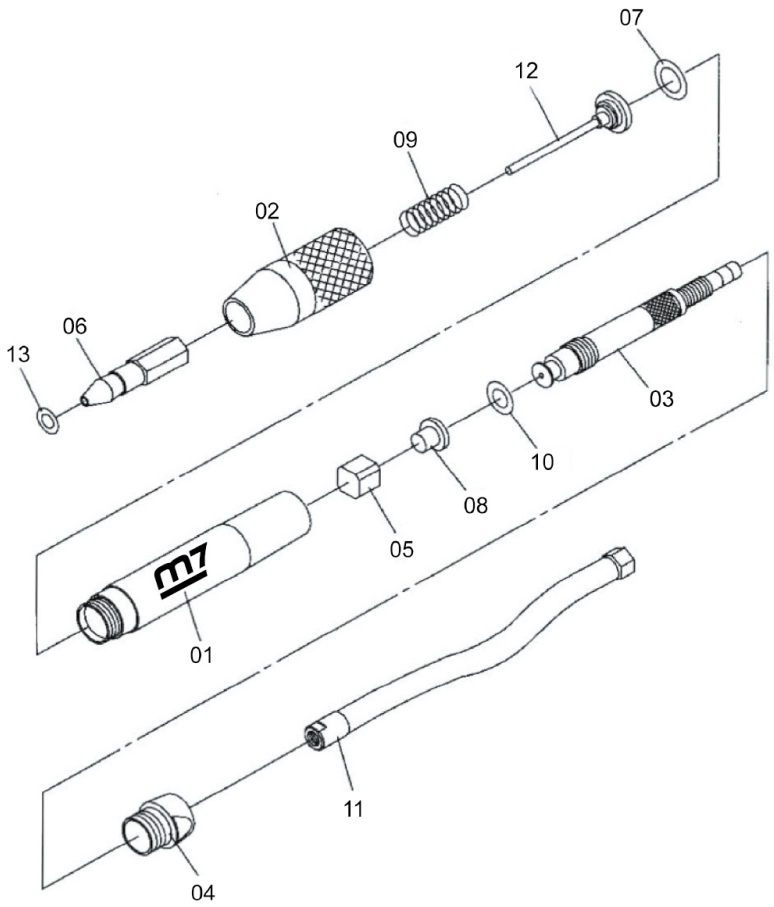

Part List QA-511

	NO.	INDEX NO.	DESCRIPTION	Q'TY
★	01	QA-511P01	Throttle Housing	1
★	02	QA-511P02	Front Housing	1
★	03	QA-511P03	Cylinder Assembly	1
★	04	QA-511P04	Speed Regulator	1
▲	05	QA-511P05	Puncher Seat	1
★	06	QA-511P06	Puncher Guide	1
▲	07	QA-511P07	O-Ring	1
★	08	QA-511P08	Buffer	1
★	09	QA-511P09	Spring	1
▲	10	QA-511P10	O-Ring	1
★	11	QA-511P11	Air Hose With Adaptor	1
●	12	QA-511P12	Engraving Puncher	1
▲	13	QA-511P13	O-Ring	1

Check out the collection of pneumatic grinders we offer.