Installation and maintenance guide

LINCOLN

Volume meters

Models 961 and 964, series D

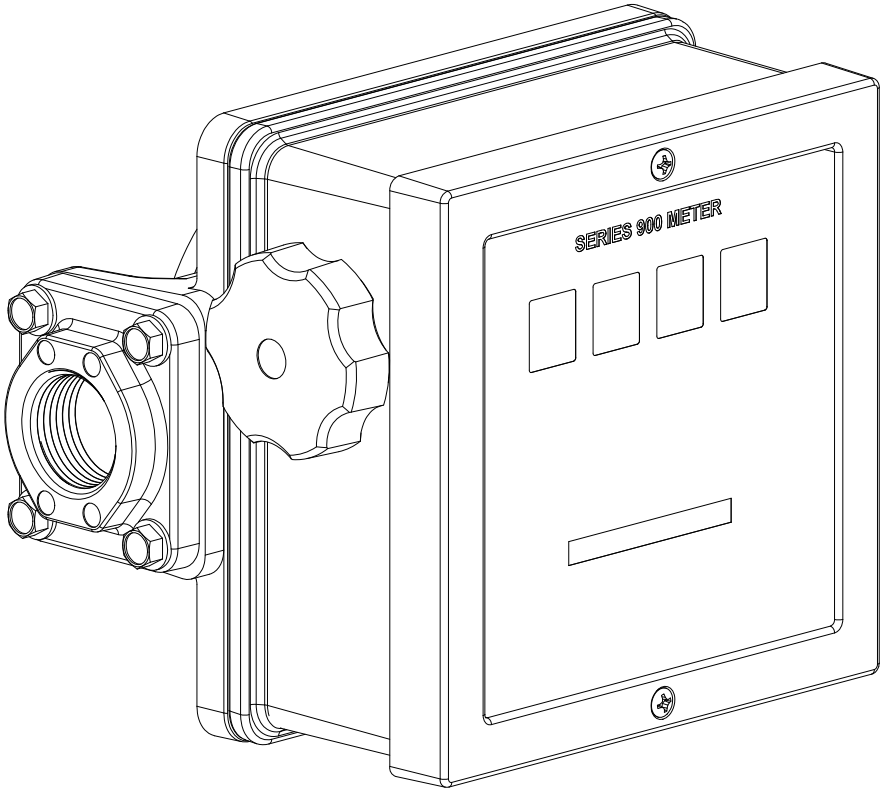

Date of issue	**April 2015**
Form number	**422445C**
Section	**F21**
Page	**29C**

⚠ DANGER

Read manual prior to installation or use of this product. Keep manual nearby for future reference. Failure to follow instructions and safety precautions may result in death or serious injury.

SKF

Contents

Explanation of signal words for safety

⚠

This is the safety alert symbol. It is used to alert you to potential physical injury hazards. Obey all safety messages that follow this symbol to avoid possible injury or death.

⚠ **SAFETY INSTRUCTIONS**

Indicates a hazardous situation which, if not avoided, will result in death or serious injury.

⚠ **DANGER**

Indicates a hazardous situation which, if not avoided, will result in death or serious injury.

⚠ **WARNING**

Indicates a hazardous situation which, if not avoided will result in death or serious injury.

Notice
Failure to comply with any danger, warning, caution, or notice, as well as any unintended or misuse, will result in loss of claim for warranty or liability for this equipment.

Safety instructions

To ensure safe and efficient operation, it is essential to read each of these warnings and precautions and to carefully follow all instructions listed in this manual.

- Improper use or installation of the product can cause serious bodily injury or death.
- **Do not** smoke near meter or use meter near an open flame when measuring flammable fluids. Fire could result.
- Do not exceed 50 psi *(3,5 bar)* line pressure.
- A filter should be used on the meter outlet to insure no foreign material is transferred to the fuel tank.
- To minimize static electricity build up, use only static wire conductive hose when metering flammable fluids, and keep the fill nozzle in contact with the container being filled during the filling process.
- Do not install additional foot valve or check valve during installation without pressure relief valve. Cracking may result.
- This product should not be used for fluid transfer into aircraft.
- This product is not suited for use with fluids for human consumption.

Notice
New metering systems must be purged prior to installation of metering control valve to free system of contaminates.

Fig. 1

Models 961 and 964

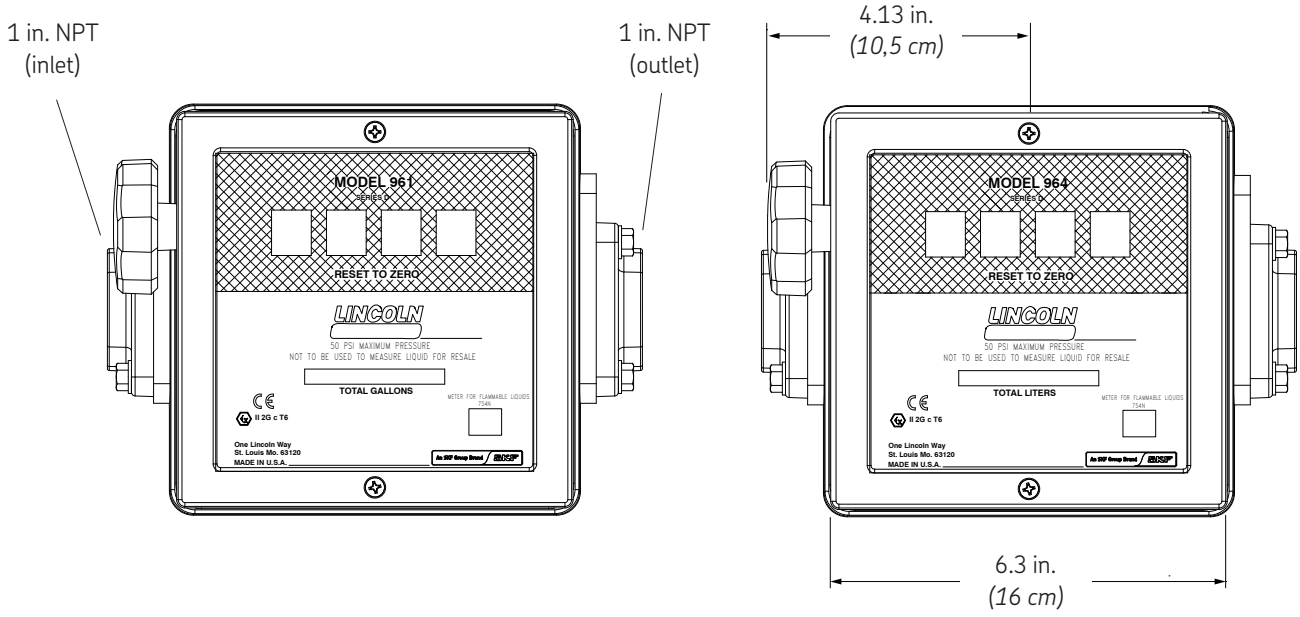

Fig. 2

Models 961 and 964

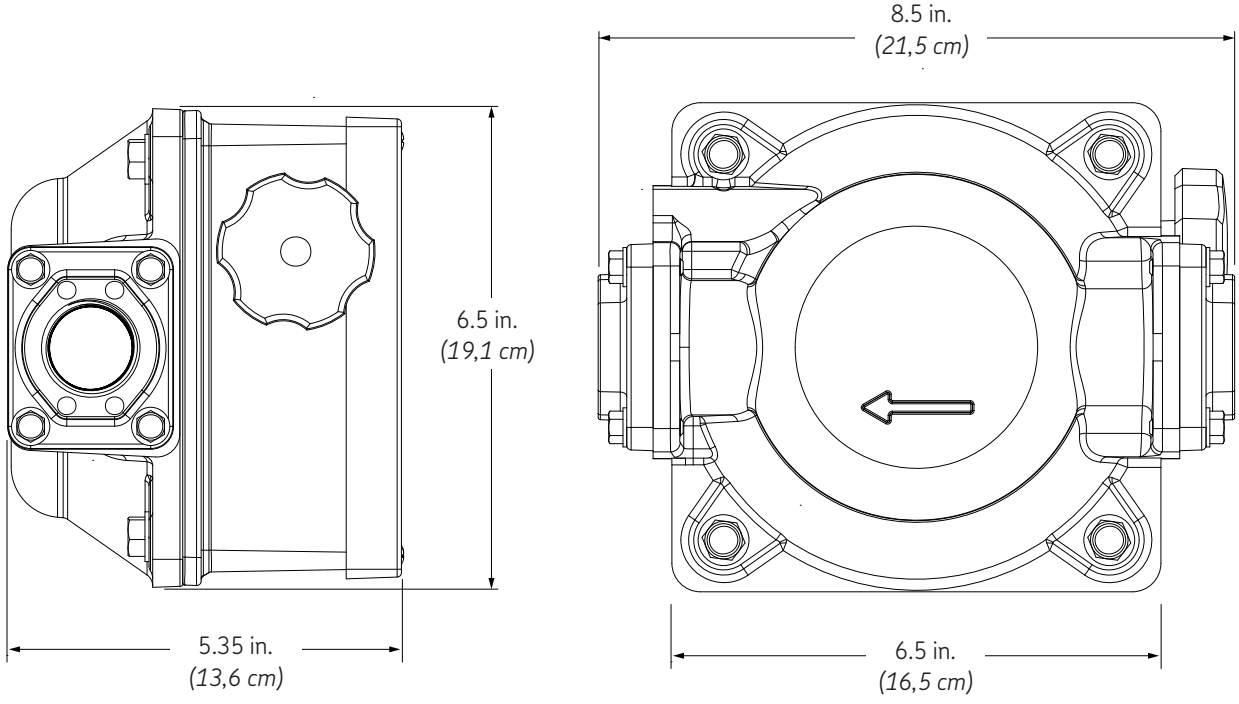

General description

The Lincoln series 900 Meter is a rotating disc flow meter. The meter uses wheel counters for registering either U.S. gallons or litres.

Meter models

Model 961 : measures flow in U.S. gallons.
Model 964 : measures flow in liters.

Both units have three unit wheels and a tenth wheel, which can be reset to zero. The meter's totalizer has eight unit wheels.

Fluid Compatibility

The 961 and 964 are compatible with the following fluids:

- Diesel fuel
- Gasoline
- Kerosene
- Mineral spirits
- Heptane
- Hexame.

The 961 and 964 are NOT compatible with the following fluids:

- Bleach
- Hydrochloric acid
- Ink
- Sulfuric acid
- Salt water.

If in doubt about compatibility of a specific fluid, contact supplier of fluid to check for any adverse reactions to the wetted materials shown on the parts list.

Safety

The safety of Lincoln series 900 meters is proven by their listing with:

- Underwriters Laboratories Inc. a nationally recognized independent organization for testing of Products to ensure public safety.
- Canadian Standards Association, a Canadian Organization for testing of products to ensure public safety.

Table 1

Specifications

Description	Specification
Flow range	6 to 40 gal./min. *(23 to 151 l/min.)*
Maximum working pressure	50 psi *(3,5 bar)*
Inlet/outlet	1 in. *(25.4mm)* /1 in. *(25.4mm)*
Housing material	Aluminum
Seals	Viton and Buna

Installation

The 900 series meter consists of a chamber housing, measuring chamber, gear train, counter assembly, and cover.

The design of the meter is such that it can be completely disassembled without disturbing the piping.

1 Determine direction for fluid to flow.
2 Install meter observing directional arrow on casting **(→ fig. 1)**.

Assembly and disassembly

Meter consists of a chamber housing, measuring chamber, gear train, counter assembly and cover. Meter can be completely disassembled without disturbing piping, or meter can be partially disassembled as required.

Notice
Seal threaded pipe joints and connections with appropriate sealant or sealant tape to minimize the possibility of leaks.

Fig. 3

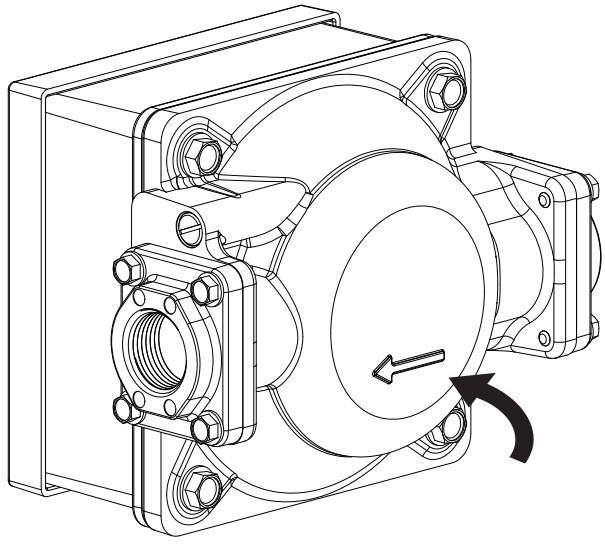

Counter assembly

For access to counter assembly:

1 Remove reset knob (**26**) by grasping edges and pulling firmly. Knob is held in place by a spring clip **(→ fig. IPB, pg. 6)**.
2 Loosen two screws (**25**) and lift bezel (**32**) off.
3 Remove two screws (**31**) to detach counter face (**30**).
4 Remove two screws (**28**) to extract counter (**29**).
5 Reassemble by reversing procedure.

Operating instructions

For accurate measurement and to prevent meter damage, meter and piping must always be filled with liquid and free of air.

Meter should be calibrated per instructions in this manual prior to its use.

1 Stop flow of liquid.
2 Reset register to "0" using reset knob (**26**) **(→ fig. IPB, pg. 6)**.

Meter is ready for use.

Maintenance

Meter should operate maintenance free. However, certain liquids can dry out while in meter housing, causing the meter to stop. If this happens, meter should be thoroughly cleaned (→ **Cleaning instructions**).

Cleaning instructions

Run a flushing fluid through meter. For a more thorough cleaning, disassemble meter per **Assembly and disassembly** section, **Meter chamber assembly** subsection. Rinse all meter components. Recalibrate meter following calibration instructions.

Storage

If meter is to be stored for a period of time, clean thoroughly. This will help protect meter from damage.

Repair

Meters needing repair should be taken to an authorized repair shop or returned to factory for service. Meters must be thoroughly triple-rinsed before being taken in for repair.

Prior to service, adhere to the following instructions:

- If meter was used for a fluid other than a petroleum product, it must be triple-rinsed and accompanied by a note indicating the chemicals that have been pumped through the unit.
- Meters not adhering to these specifications may be refused service at either the repair shop or at the factory.

When ordering repair parts, be sure to give replacement part number, date of manufacture and meter series number. This will ensure that the correct replacement part is supplied.

Notice
If replacement of any components of meter chamber assembly is required, complete assembly must be replaced due to precise method of construction, assuring a proper fit and a correctly operating chamber.

Calibration

The Lincoln series 900 meters can be calibrated for either U.S. gallons or litres. Calibration is required upon installation, after disassembly, after significant wear or when metering a fluid of different viscosity. Depending on the model, series 900 meters are calibrated at the factory metering gasoline in either U.S. gallons or litres. Calibration must be done between 6 and 40 gal./min. *(23 and 151 l/min.)*.

Meter calibration can be easily changed by following the calibration procedure listed below. A proving container or a container of **known** volume will be needed for the calibration procedure. It is recommended that the container's volume be at least five times larger than the unit of calibration. For example, a five-gallon container should be used when calibrating for gallons.

Troubleshooting guide

Problem	Possible cause	Solution
Counter reading high or low	Calibration off Air in product Measuring chamber or gears sticking	Recalibrate meter Find and repair air leaks in system Clean or replace internal metering components
Shaft seal leakage	Dirty seal Bad seal	Clean o-ring seals and seat area Replace seals
Gasket leakage	Loose joints Dirty gasket Bad gasket	Tighten joints Clean gasket and seat area Replace gasket
Low flow capacity	Clogged meter chamber (or strainer)	Clean meter chamber

Fig. IPB

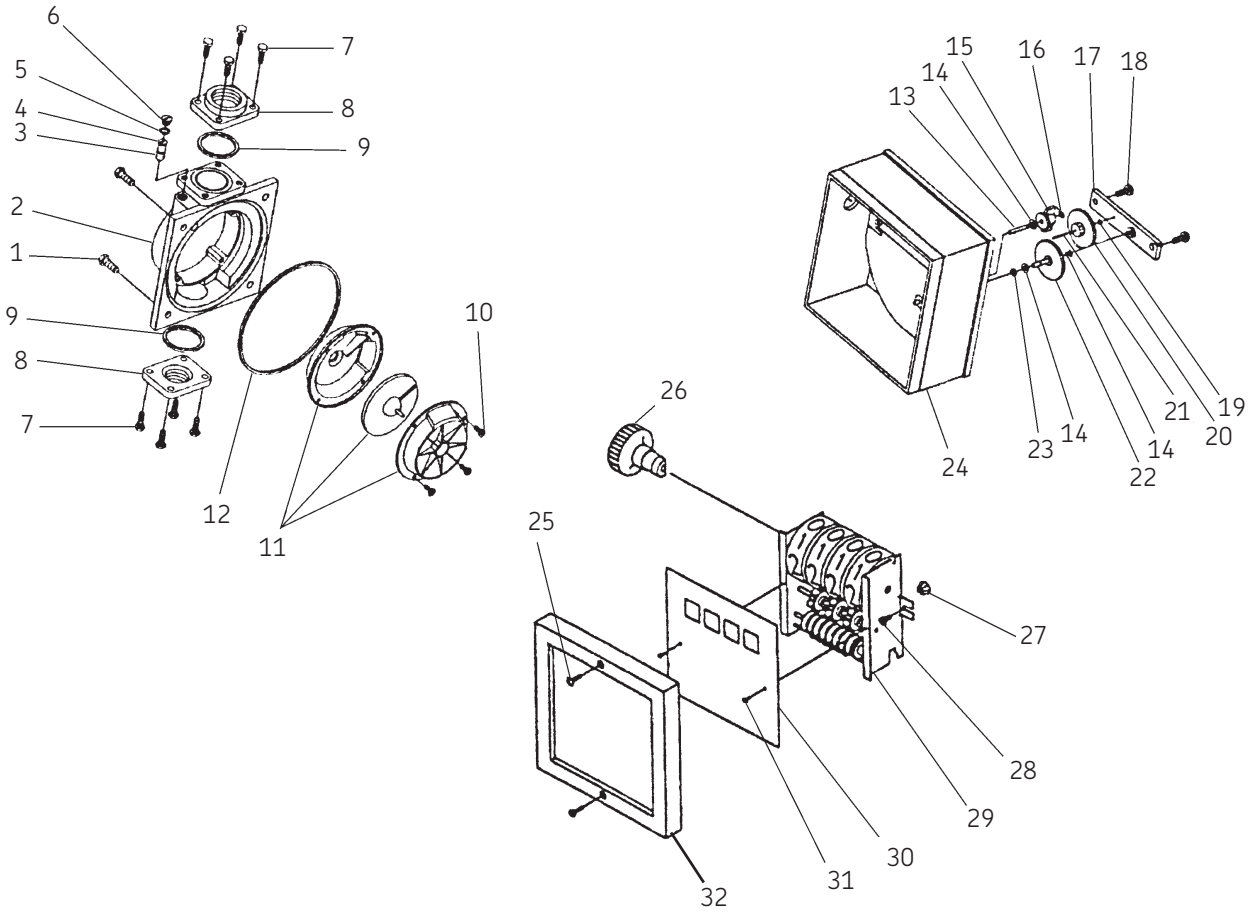

Table 2

71.10 - Table title - heading

Item no.	Description	Qty.	Item no.	Description	Qty.
1	5/16 x 18 x 7/8 HHCS	4	19	Washer [1]	1
2	Meter housing	1	20	Cluster gear (gallons) [1]	1
3	O-ring (-010) [1]	1		Cluster gear (liters)*	1
4	Adjustment screw	1	21	Shaft cluster gear	1
5	O-ring (-012) [1]	1	22	Drive gear (gallons) [1]	1
6	Seal Screw	1		Drive gear (liters) [1]	1
7	1/4-20 x 3/4 HHCS (1 in. meters)	8	23	O-ring (5-106) [1]	1
8	1 in. meter flange	2	24	Meter cover (includes item **13**) [1]	1
9	Inlet/outlet gasket [1]	2	25	#8 x 1/2 OHMS - type B	2
10	#10-32 x 1/2 PHMS, ACRII, T	4	26	Knob	1
11	Meter chamber assembly [1]	1	27	Pinion bevel [1]	1
12	Cover gasket*	1			
			28	#8-32 x 5/16 PHMS < ACR II, TT	2
13	Driver pinion shaft (included with item **24**) [1]	1	29	Counter assembly	1
14	Washer [1]	3	30	Counter face	1
15	Driver pinion [1]	1			
			31	#4-40 x 1/4 PHMS	2
16	Retaining ring [1]	1	32	Bezel	1
17	Gear frame [1]	1			
18	#12-1/2 PHMS< Type AB	2			

[1] indicates part is included in meter repair kit 279065